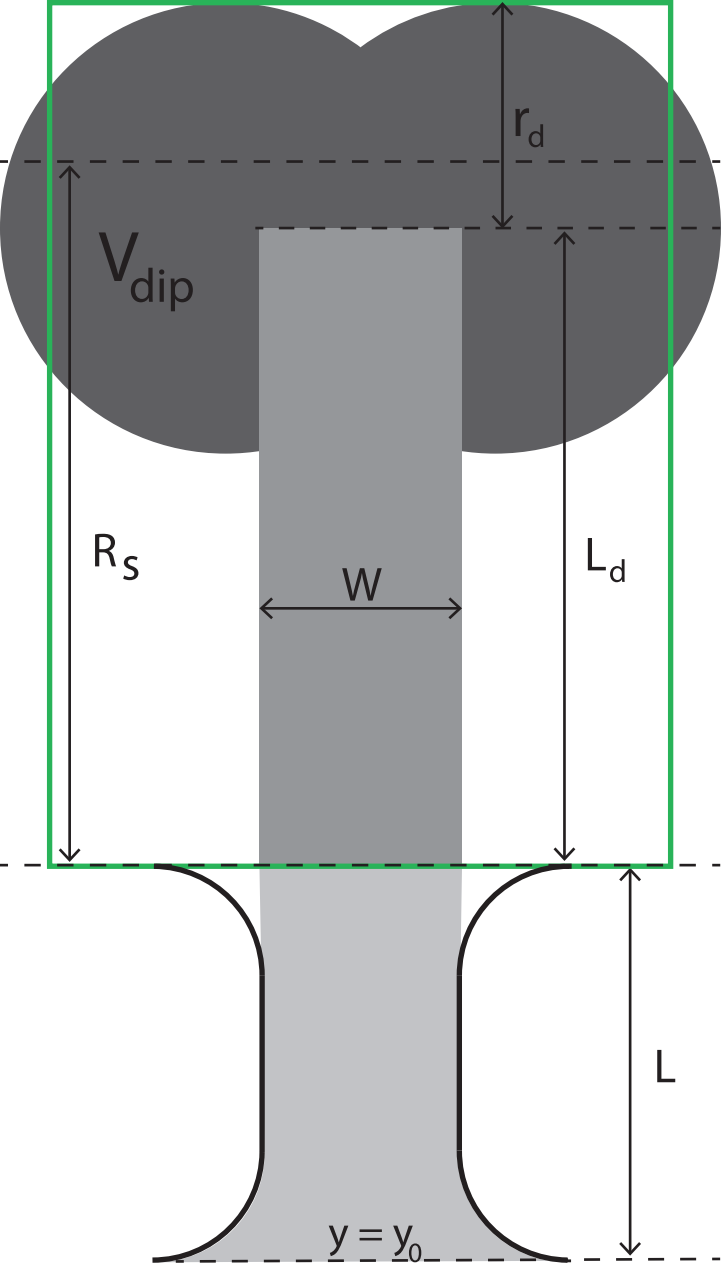
r_d
V_{dip}
R_s
L_d
W
L
$y = y_0$